REVISIONS				
ZONE	LTR	DESCRIPTION	DATE	APPROVED

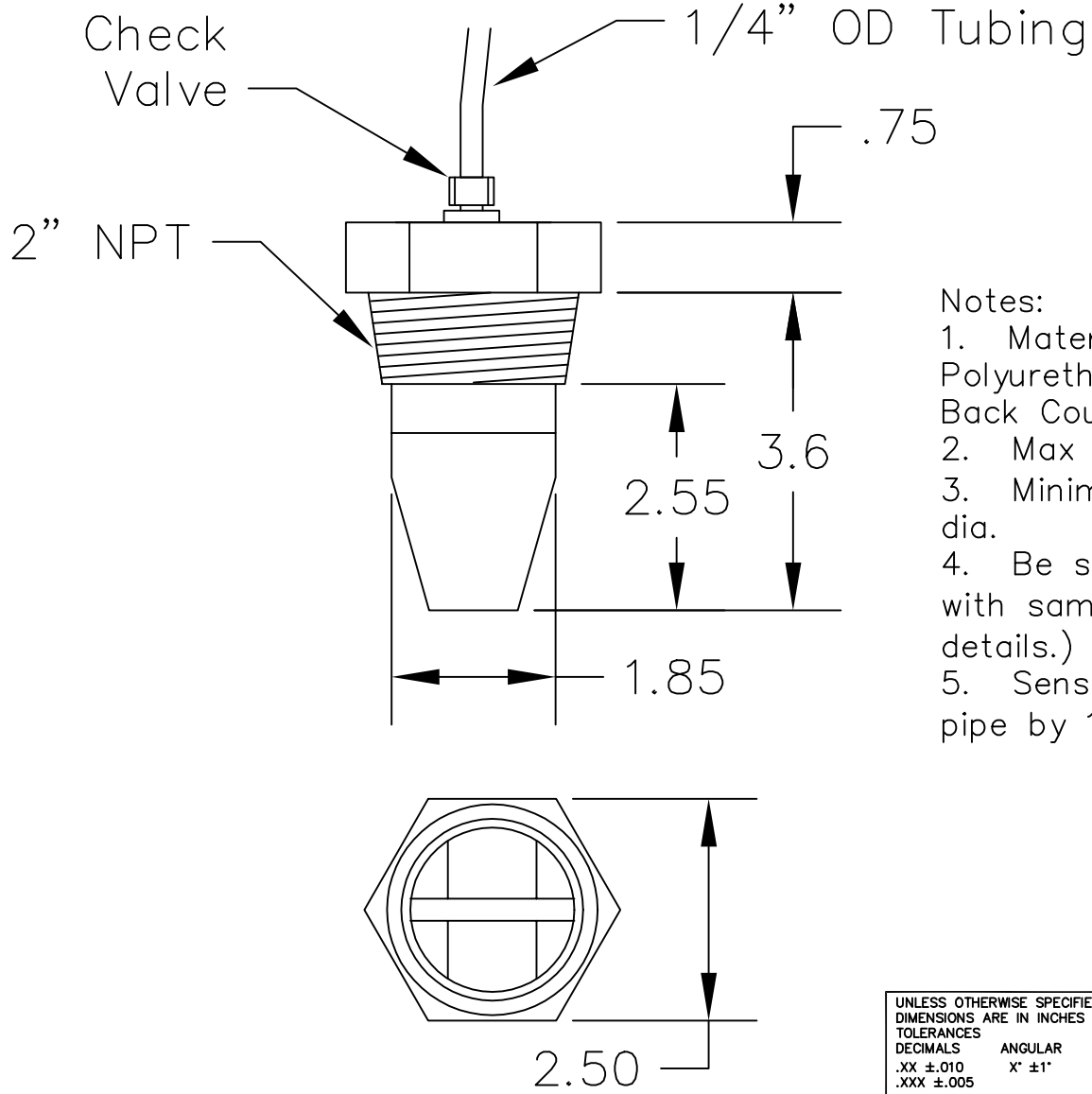

Notes:
1. Material: Sensor head – Epoxy and Polyurethane
Back Coupling – 316 S.S., Passivate
2. Max in–line pressure is 20psi
3. Minimum pipe size is 3" nominal dia.
4. Be sure that Sensor Gap is in–line with sample flow. (See manual for details.)
5. Sensor must penetrate ID of the pipe by 1.5".

UNLESS OTHERWISE SPECIFIED: DIMENSIONS ARE IN INCHES TOLERANCES DECIMALS .XX ±.010 .XXX ±.005 ANGULAR X° ±1° DO NOT SCALE DRAWING	CONTRACT NO.	InsiteIG 80 Whisperwood Blvd. Suite 107 Slidell, LA 70458
MATERIAL –	DRAWN / DATE	TITLE OUTLINE & MOUNTING MODEL 15T
	CHECK	
	DESIGN	
FINISH –	APPROVED	SIZE C / DWG NO. IIG03N006 / REV –
SPEC.	CUSTOMER	SCALE NTS / SHEET 1 OF 2

DWG. No IIG03N006 REV. –