REVISIONS				
ZONE	LTR	DESCRIPTION	DATE	APPROVED

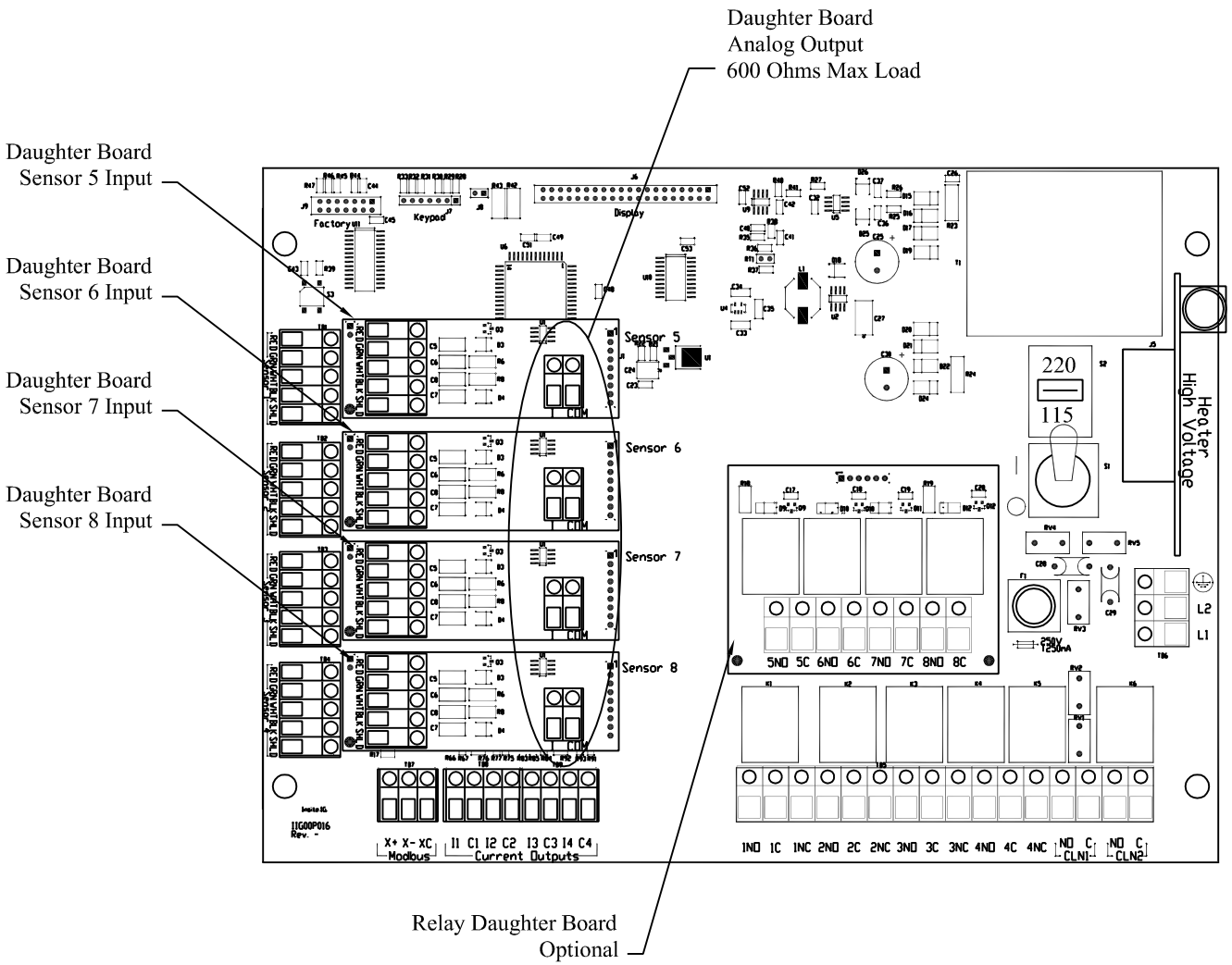

SIZE	DWG NO.	REV
C	IIG07R111	–
SCALE NTS		SHEET 2 OF 2

DWG. No IIG07R111 REV. –